RE-1231 / Graphic Dimensions

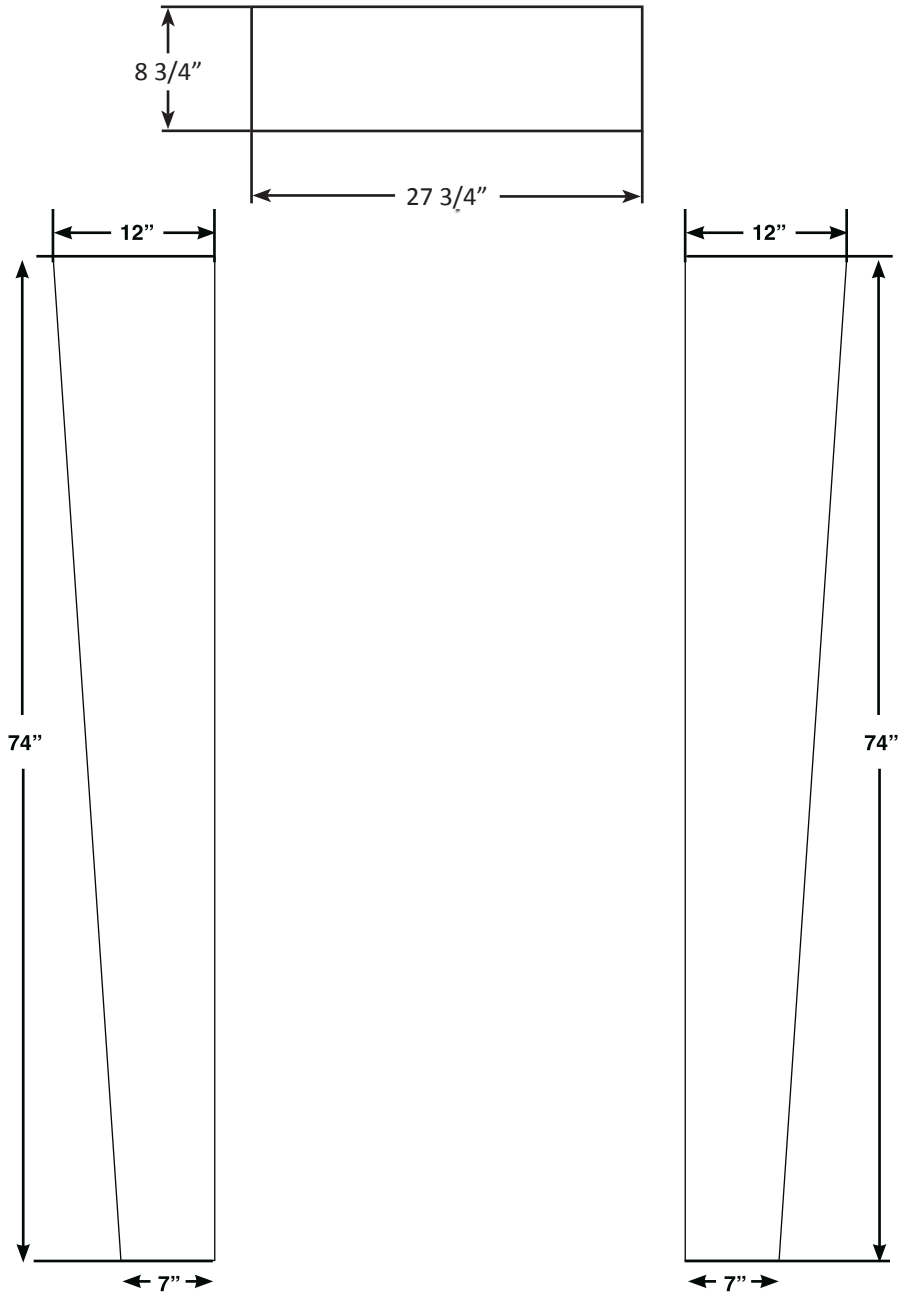

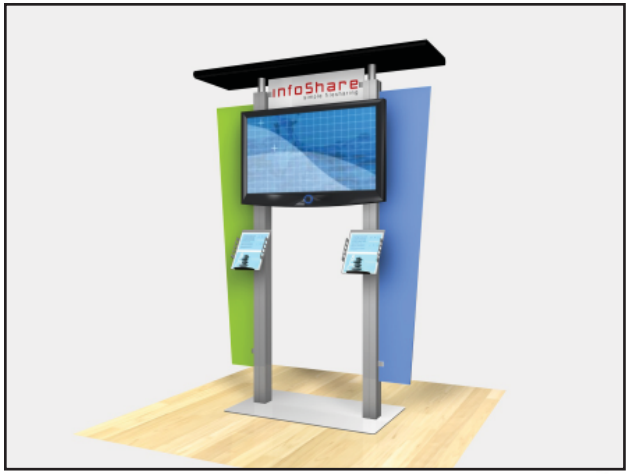

OPTION #1 - All Graphics 1/4” Sintra

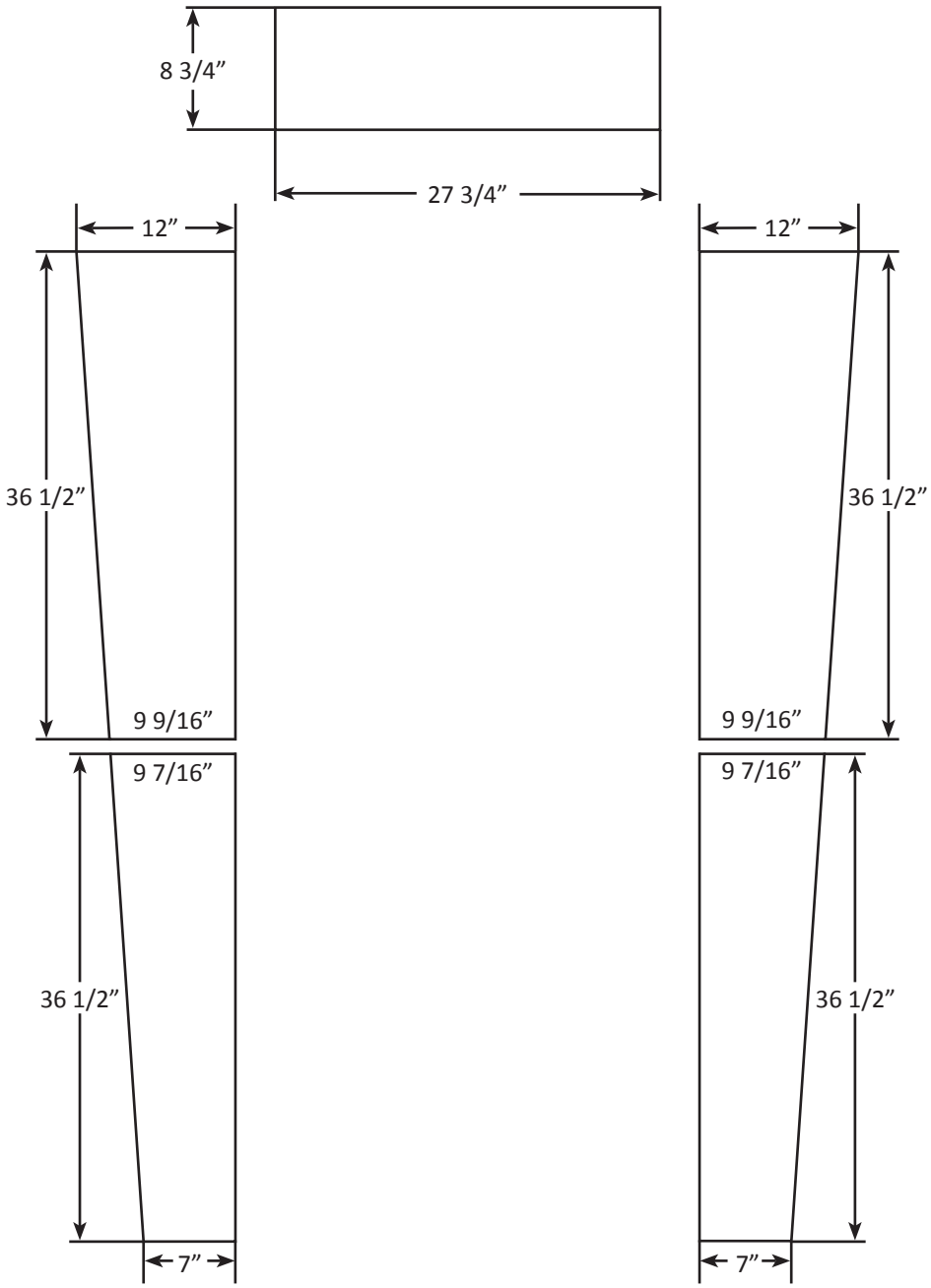
8 3/4”
27 3/4”
12”
36 1/2”
9 9/16”
9 7/16”
36 1/2”
7”
12”
36 1/2”
9 9/16”
9 7/16”
36 1/2”
7”

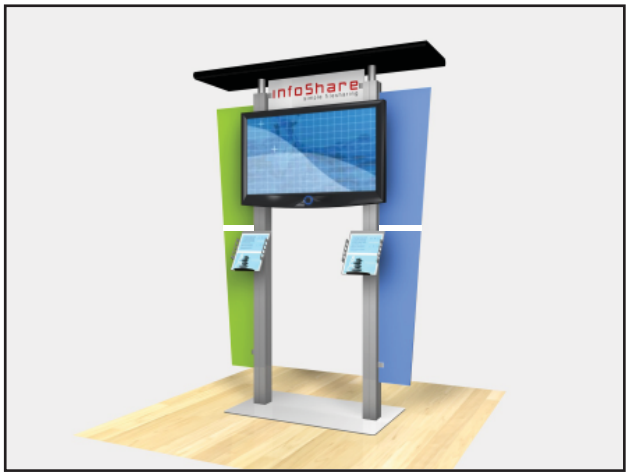
infoShare